INSTALLATION INSTRUCTIONS

Your Rupp Marine Top Guns come fully assembled. To install you will need the following. 1/4" allen wrench, 7/16" wrench or adjustable wrench and a phillips screwdriver

Please contact us at 772-286-5300 or service@ruppmarine.com with any questions.

1

Disassemble upper unit from lower unit by removing the bolts using phillips screwdriver and 7/16" wrench.

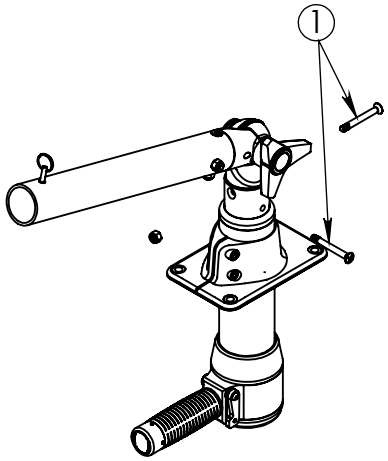

2

Remove upper unit from lower unit.

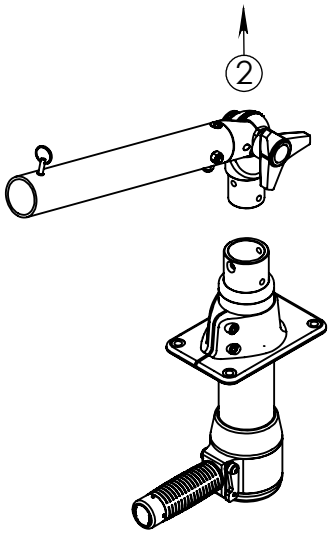

3

Loosen mounting collar by unscrewing both allen screws with 1/4" allen wrench.

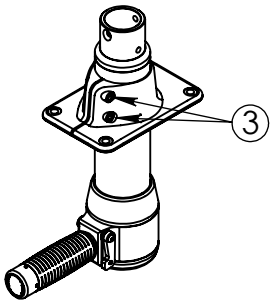

4

Slide mounting collar vertically to remove from Top Gun.

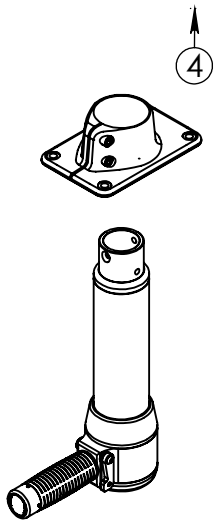

5

Attach mounting collar to mounting plate or hardtop with appropriate length 5/16" stainless steel allen screws and washers.(not included) <u>DO NOT FULLY TIGHTEN BOLTS AT THIS POINT.</u>

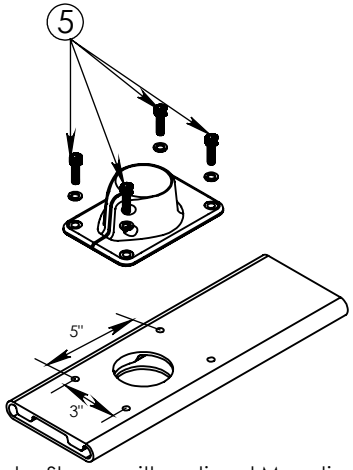

Note: Shown with optional Mounting Plate p/n 17-1502-23

6

Insert lower unit into mounting collar from underneath. With lower unit in desired position, tighten both allen bolts with allen wrench to secure the lower unit into the mounting collar.

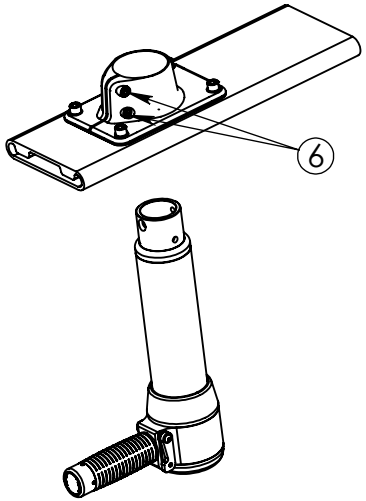

7

Tighten allen screws to secure mounting collar plate or hardtop

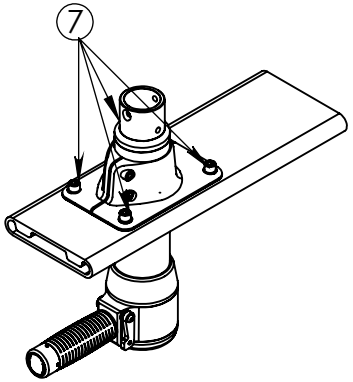

8

Insert upper unit into lower unit and align screw holes.

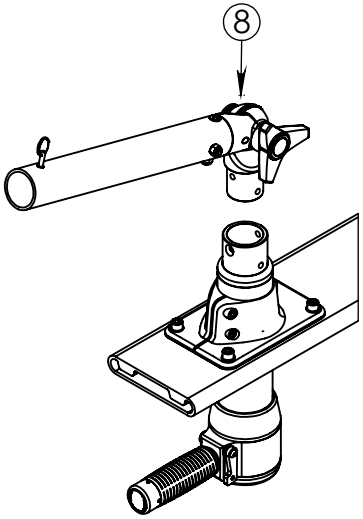

9
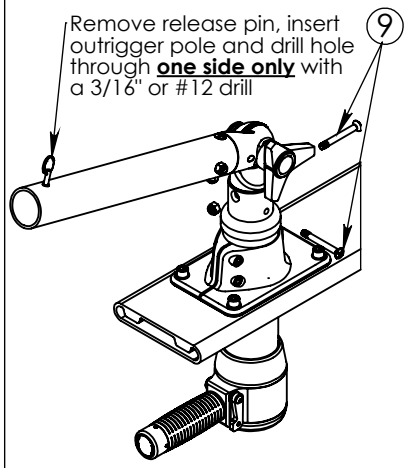
Secure entire Top Gun assembly by fastening the screws and using phillips screwdriver and 7/16" wrench.