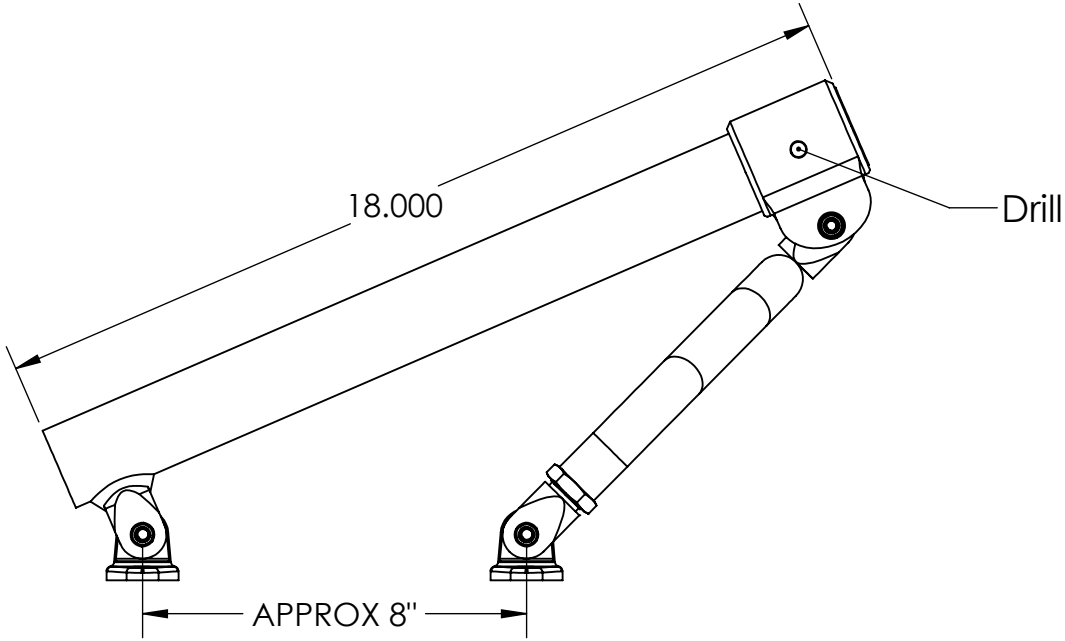

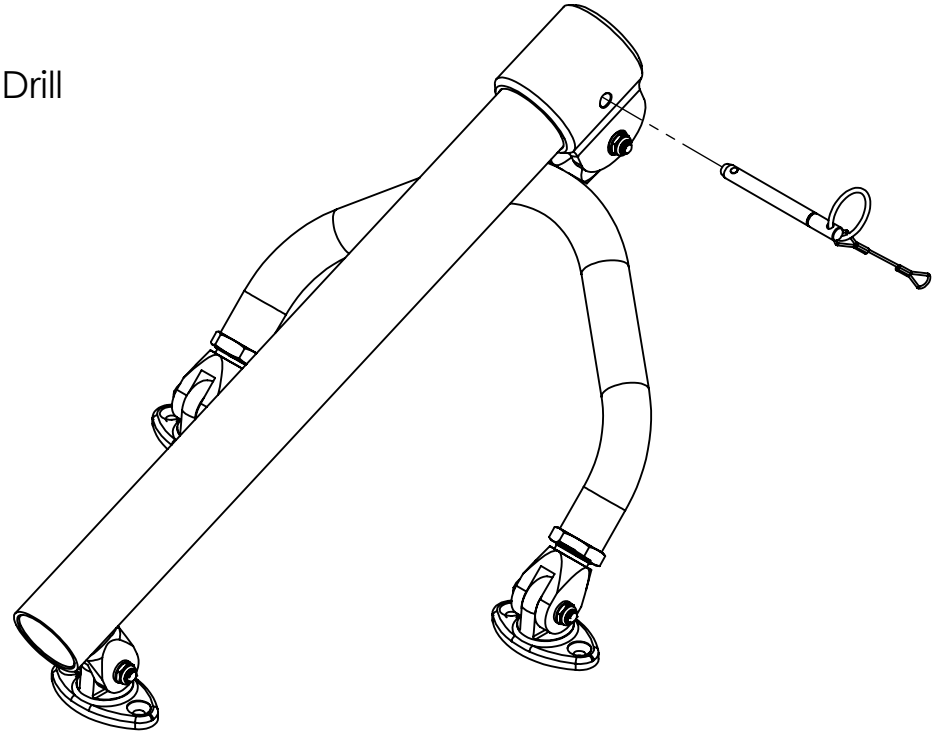

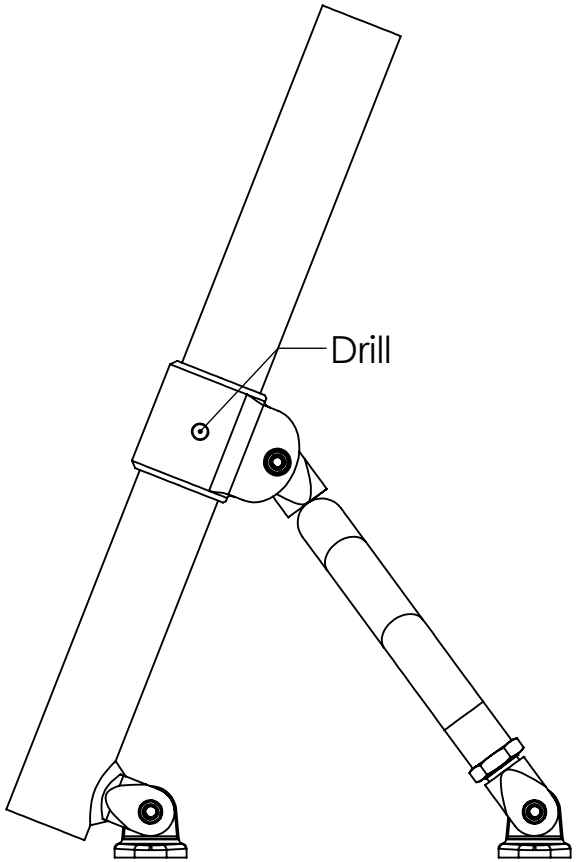

1. **Mount similar as shown to match lines of your outriggers or tower.**
2. **Drill holes for release/adjustment pin.**
3. **Once mounted secure in position with release pin.**

Rupp Marine Inc
Serious Sportfishing Hardware
(772)286-5300 (866)477-2678

CA-0001
Adjustable Center Rigger

C:\Vault\CA-0000\