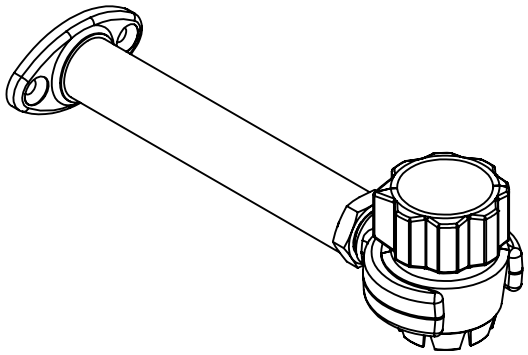

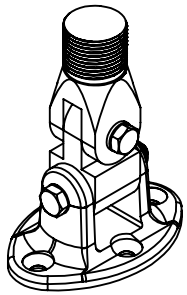

09-1258-50 (For 1.5" O.D.Antenna)
Antenna Collar

Options
09-1258-2PC (For 1.5" O.D. Antenna)
Two Piece Antenna Collar

09-1328-50 (For 1" OD Antenna)
One Piece Antenna Collar

09-1263-23
Flat Mount

03-1103-23
Jam Nut

2.00

09-1260-23
Threaded
Support Yoke

09-1050-06 (6"Pipe)
09-1050-12 (12"Pipe) Optional
3/4" Pipe Thread

09-1088-23
Threaded Antenna Clevis

420-NTE-01
Jam Nut
(2 Per)

03-1252-50
Bushing

03-1121-50
Flanged Bushing
(4 Per)

420-1375-011
Cap Screw

03-1013-23
Toggle

420-1875-011
Cap Screw

03-1198-23
Oval Base

03-1253-50
Bushing

Top

8"
(Optional 14"
PAK-0006-12)

1.40

2.50

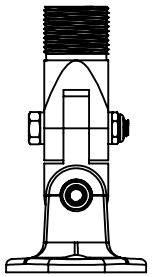

RUPP MARINE INC.
Port Salerno, Fl.

PAK-0006
Antenna Mount with Four-Way Base