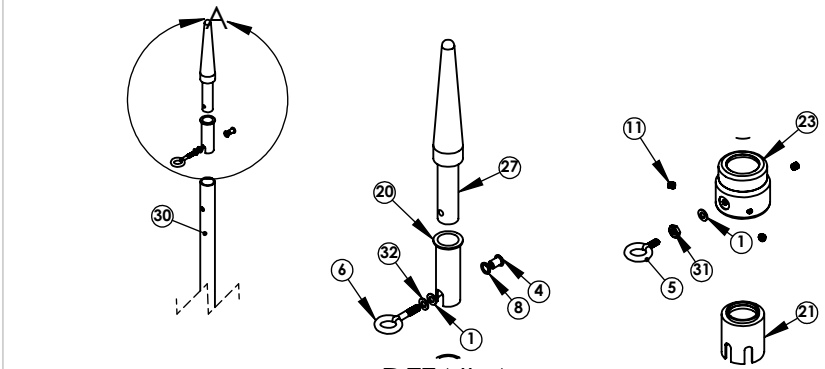

DETAIL A

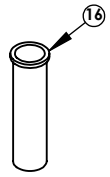

Detail B

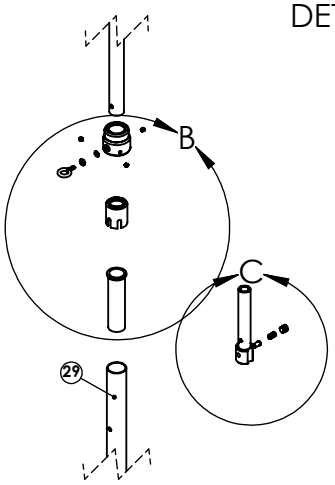

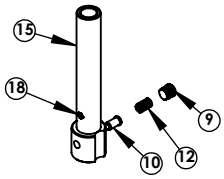

Detail C

21-1754-AS
Upper Plunger Base

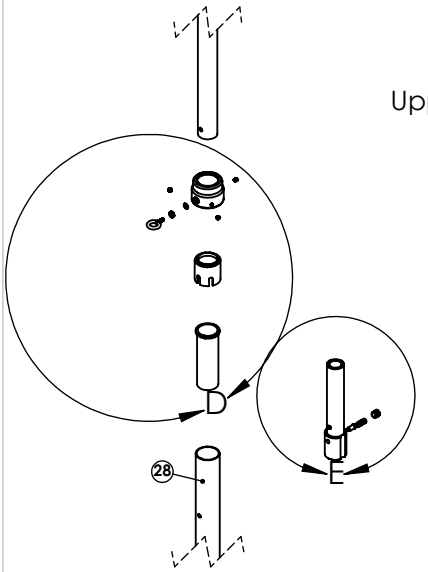

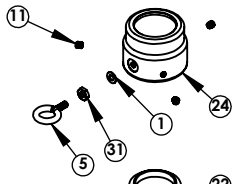

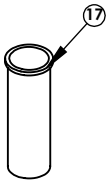

Detail D

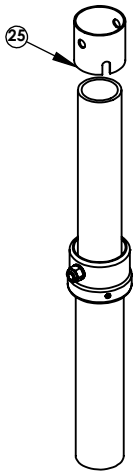

Detail F

CA-0156-AS
Reinforcement Sleevee
with Collar

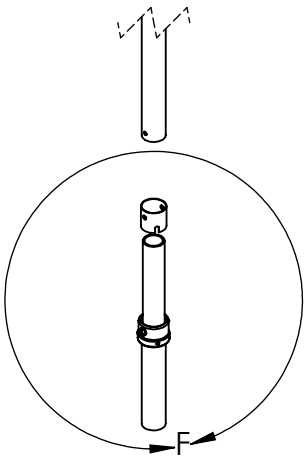

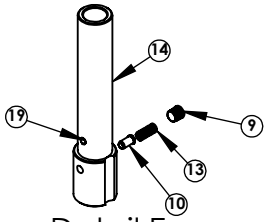

Detail E

21-1753-AS
Lower Plunger Base

#	QTY	PART NO	DESCRIPTION
1	3	03-1076-50	NYLON WASHER
4	1	13-1341-40	HAYLYARD LOCK SCREW NUT (10-32)
5	2	13-1666-42	EYE BOLT, 10-32 THREAD
6	1	13-1706-42	EYE BOLT 10-32 THREAD
8	1	13-1843-50	.375 OD X .255 X .032 NYLON WASHER
9	2	21-1653-40	SHOULDER BOLT
10	2	21-1657-AS	PLUNGER
11	9	21-1667-40	SET SCREW 10-32 THREAD
12	1	21-1676-40	.300OD X .31W X .450
13	1	21-1677-40	.300OD X .35W X .660
14	1	21-1753-50	PLUNGER CARTRIDGE LG
15	1	21-1754-50	PLUNGER CARTRIDGE MD
16	1	21-1760-50	TUBE BUSHING SM
17	1	21-1761-50	TUBE BUSHING LG
18	1	21-1768-40	1/4-20 X .75 SOCKET SET SCREW CUP POINT
19	1	21-1769-40	1/4-20 X 1 SOCKET SET SCREW CUP POINT
20	1	21-1793-50	TIP POINT ISOLATION SLEEVE
21	1	21-1794-50	ISOLATION SPACER MEDIUM
22	1	21-1795-50	ISOLATION SPACER LG
23	1	21-1796-23	TELE COLLAR MED CF
24	1	21-1797-23	Tele Collar LG CF
25	1	21-1798-50	ISOLATION SPACER BASE ANCHOR
27	1	21-1800-23	TIP POINT FOR CF
28	1	21-BAS-18CT	BASE SECTION
29	1	21-MID-18CT	Mid Section (Includes Detail E)
30	1	21-TIP-18CT	Tip Section (Includes Detail C)
31	2	132-000-RH	10-32 NUT
32	1	375-0185-S1	WASHER

Rupp Marine Inc
Serious Sportfishing Hardware
(772)286-5300 (866)477-2678

A0-1800-CFT
Parts Breakdown

C:\Vault\A0-1800-CFT\